GSPRODUCTS
SUPPLIERS OF CHAIN, WIRE ROPE AND MARINE FITTINGS

Galvanised Specialists Ltd | Lodgefield Road | Halesowen | West Midlands, B62 8AR
Tel. 0121 601 0480 | Email sales@gsproducts.co.uk

25mm Electro Galvanised Steel D Shackle



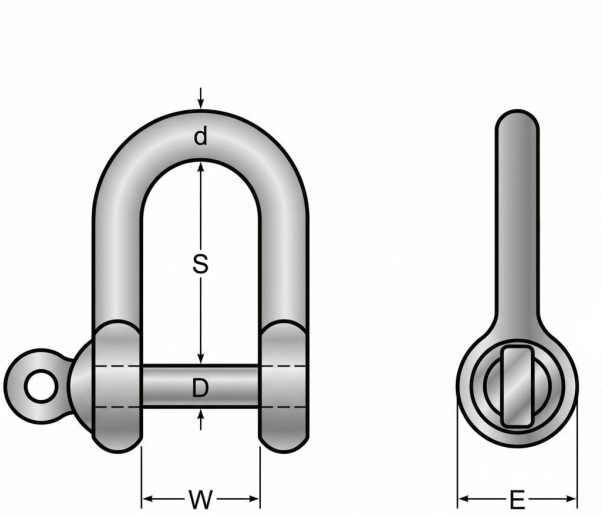

Product Name	25mm D Shackle
d (mm)	25
D (mm)	25
E (mm)	48
W (mm)	48
S (mm)	96

Note - Product sizes are liable to change from time to time, if your dimension requirements are critical, please contact us.