GSPRODUCTS
SUPPLIERS OF CHAIN, WIRE ROPE AND MARINE FITTINGS

Galvanised Specialists Ltd | Lodgefield Road | Halesowen | West Midlands, B62 8AR
Tel. 0121 601 0480 | Email sales@gsproducts.co.uk

20mm Electro Galvanised Bow Shackle



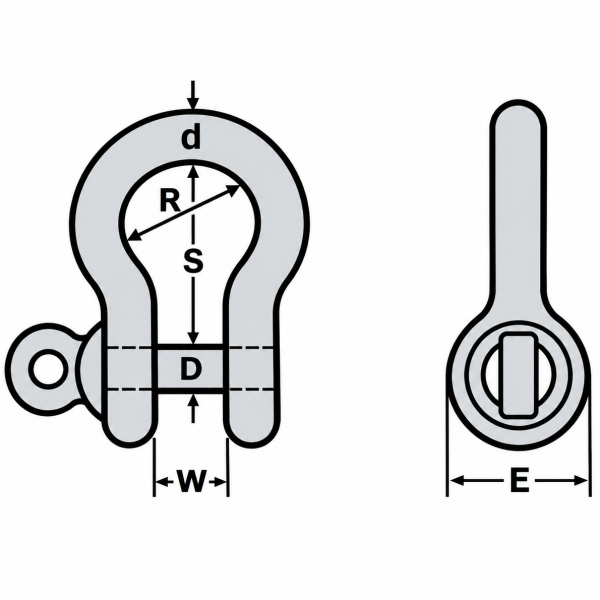

Product Name	20mm Bow Shackle
d (mm)	20
D (mm)	20
E (mm)	40
R (mm)	66
W (mm)	32
S (mm)	66

Note - Product sizes are liable to change from time to time, if your dimension requirements are critical, please contact us.