GSPRODUCTS
SUPPLIERS OF CHAIN, WIRE ROPE AND MARINE FITTINGS

Galvanised Specialists Ltd | Lodgefield Road | Halesowen | West Midlands, B62 8AR
Tel. 0121 601 0480 | Email sales@gsproducts.co.uk

10mm BZP Delta Triangle Quick Link



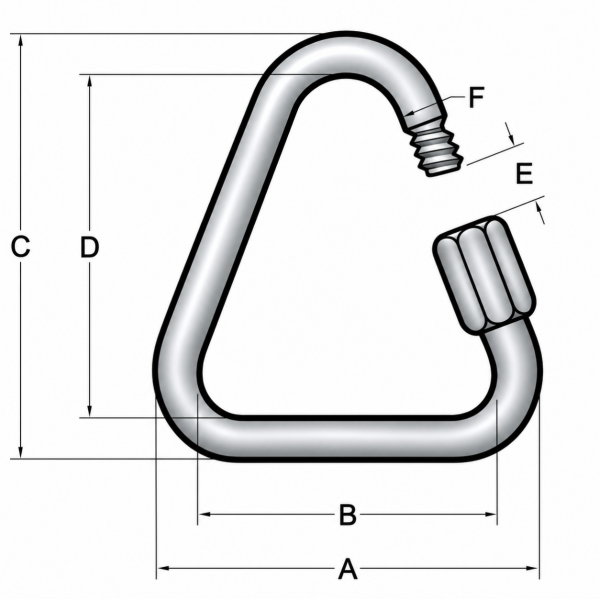

Product Name	10mm BZP Delta Quick Link
A (mm)	61
B (mm)	41
C (mm)	77
D (mm)	61
E (mm)	11
F (mm)	13

Note - Product sizes are liable to change from time to time, if your dimension requirements are critical, please contact us.