GSPRODUCTS
SUPPLIERS OF CHAIN, WIRE ROPE AND MARINE FITTINGS

Galvanised Specialists Ltd | Lodgefield Road | Halesowen | West Midlands, B62 8AR
Tel. 0121 601 0480 | Email sales@gsproducts.co.uk

# 8mm BZP Delta Triangle Quick Link



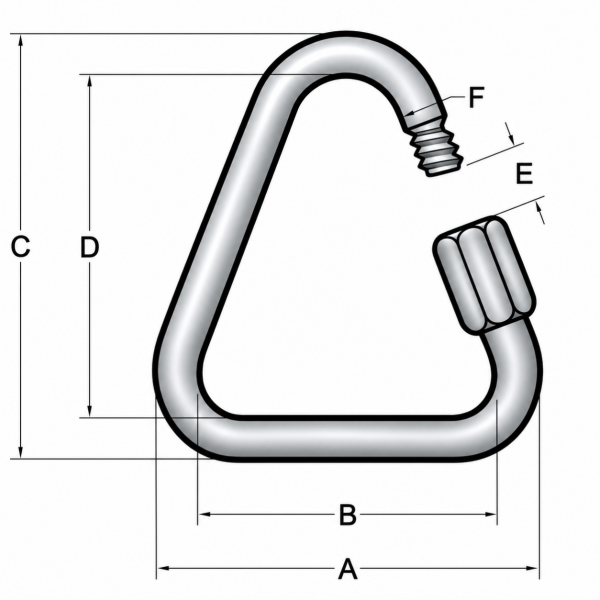


| | |
|---|---|
| Product Name | 8mm BZP Delta Quick Link |
| A (mm) | 56 |
| B (mm) | 40 |
| C (mm) | 73 |
| D (mm) | 56 |
| E (mm) | 10 |
| F (mm) | 12 |

Note - Product sizes are liable to change from time to time, if your dimension requirements are critical, please contact us.