GSPRODUCTS
SUPPLIERS OF CHAIN, WIRE ROPE AND MARINE FITTINGS

Galvanised Specialists Ltd | Lodgefield Road | Halesowen | West Midlands, B62 8AR
Tel. 0121 601 0480 | Email sales@gsproducts.co.uk

6mm Stainless Steel Swageless Eye Terminal



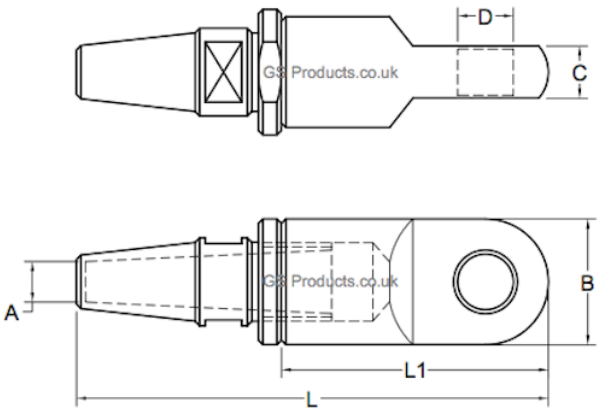

Product Name	6mm Swageless Eye
A (mm)	7
B (mm)	24
C (mm)	10
L (mm)	98
D (mm)	13
L1 (mm)	55
Suit Wire Ø (mm)	6

Note - Product sizes are liable to change from time to time, if your dimension requirements are critical, please contact us.